THIS DOCUMENT AND THE INFORMATION
IT CONTAINS IS THE PROPERTY OF EMTEQ INC.
AND MAY NOT BE USED IN ANY WAY WITHOUT
THE EXPRESS WRITTEN CONSENT OF EMTEQ INC.

REV	REVISION	DATE	ER #	INTL
L	ADD P/N'S FOR TMS410-1 & EDIT DIMENSIONS	10/3/2008	8969	LLP
M	ADD CORRECT HEATSHRINK FOR 295-1	07/13/2009	9921	VML
N	CHANGE HEATSHRINK P/N & ADD NOTES 1 & 2	09/23/2009	10149	LLP

DIMENSIONAL INFORMATION

PART NO.	"A"	"B"	"C"	ASS'Y INSTRUCTIONS
TMS130-1	0.64 (16.3)	1.20 (30.5)	0.22 (5.6)	ES-105-1
TMS165-1	0.64 (16.3)	1.20 (30.5)	0.25 (6.4)	ES-105-1
TMS195-1	0.64 (16.3)	1.13 (28.7)	0.25 (6.4)	ES-105-1
TMS205-1	0.64 (16.3)	1.20 (30.5)	0.30 (7.6)	ES-105-1
TMS225-1	0.64 (16.3)	1.13 (28.7)	0.30 (7.6)	ES-105-1
TMS240-1	0.64 (16.3)	1.13 (28.7)	0.30 (7.6)	ES-105-1
TMS295-1	0.64 (16.3)	1.71 (43.4)	0.39 (9.9)	ES-105-7
TMS340-1	0.64 (16.3)	1.71 (43.4)	0.39 (9.9)	ES-105-7
TMS400-1	0.64 (16.3)	1.71 (43.4)	0.39 (9.9)	ES-105-7
TMS410-1	0.64 (16.3)	1.88 (47.8)	0.51 (13.0)	ES-105-11
TMS488-1	0.64 (16.3)	2.01 (51.1)	0.61 (15.5)	ES-105-28
TMS500-1	0.64 (16.3)	1.88 (47.8)	0.56 (14.2)	ES-105-11

NOTES:

1. 29-174-4 IS A 3/4" HEATSHRINK
2. 29-174-2 IS A 3/8" HEATSHRINK

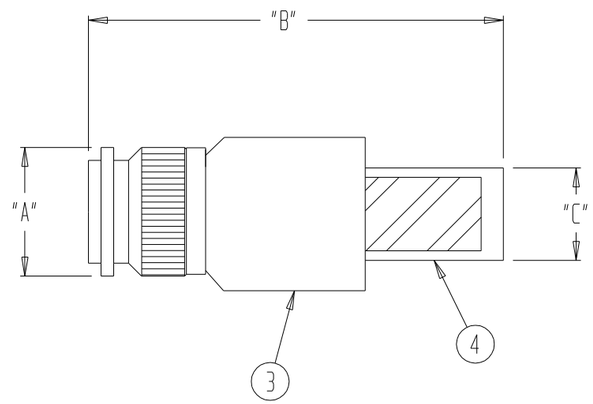

SPECIFICATIONS:

1) ELECTRICAL
- IMPEDANCE: 50 OHMS
- FREQUENCY RANGE: 0 TO 11 GHZ
- VOLTAGE RATING: 1000 V RMS
- DIELECTRIC WITHSTANDING VOLTAGE: 2,500 V RMS
- INSULATION RESISTANCE: 5000 MEGOHMS MIN

2) MECHANICAL
- TERMINATION STYLE: INNER CONTACT - SOLDER
  OUTER CONTACT - CRIMP
- TEMPERATURE RANGE: -65° C TO + 165° C
- FINISHES:
  - BODY FINISH: PROPRIETARY NICKEL
  - CONTACT FINISH: GOLD PLATED PER MIL-G-45204

DESIGNED IN ACCORDANCE WITH MIL-C-39012 STANDARDS.

TMS	500-1	488-1	410-1	400-1	340-1	295-1	240-1	225-1	205-1	195-1	165-1	130-1	PART NUMBER	DESCRIPTION	ITEM
	1	1	1	1	1	1							29-174-4	DURABLE HEATSHRINK	5
							1	1	1	1	1	1	29-174-2		
		1											29-142-2/29-143-2	CRIMP TUBE	4
										1			29-100-4/29-100-74		
			1										29-142-4		
						1							29-141-2		
												1	29-140-2		
												1	29-140-4		
											1		29-138-2		
									1				29-137-2		
	1												29-100-92		
					1								29-100-68		
							1						29-100-63		
				1									29-100-56		
								1					29-100-12		
			1										44-257-1	BODY	3
				1									09-224-1		
	1												09-138-2		
		1											09-139-1		
								1					09-137-4		
					1	1							09-136-1		
												1	09-137-3		
							1		1				09-137-2		
										1	1		09-137-1		
			1										16-672-19	CONTACT	2
				1									06-672-17		
	1	1											06-672-8		
					1	1							06-672-4		
										1	1		06-296-12		
							1	1	1				06-296-8		
												1	06-296-4		
			1										15-345-7	INSULATOR(REAR)	1
	1	1											15-345-3		
								1					15-469-17		
												1	15-469-10		
				1									15-469-8		
					1	1							15-469-5		
							1		1				15-469-4		
										1	1		15-469-3		

PARTS LIST

MATERIAL	SCALE	SIZE B	DATE 04/27/99
FINISH	TOLERANCES UNLESS NOTED .XX = ± .03 .XXX = ± .010 ANGLES ± 1°		DRAWN A. LIPOWSKI
			DESIGNED
			CHECKED 09/24/2009
	CAD GENERATED AND MAINTAINED DRAWING -- DO NOT SCALE		APPROVED 09/24/2009 T.FORST

EMTEQ
5349 S. EMMER DRIVE
NEW BERLIN, WI 53151
(888) 679-6170

PLUG, TNC, STRAIGHT CONNECTOR

CAGE CODE	DWG #	SHT
06WH3	TMSXXX-1	1 OF 1

FILE: TMSXXX-1.prt

NOTICE -- ALL CHANGES TO THIS DOCUMENT ARE CONTROLLED BY EMTEQ INC / UNLESS OTHERWISE STATED, ALL REPRODUCTIONS OF THIS DOCUMENT ARE NOT CONTROLLED BY EMTEQ INC